MRL Freight Elevator

Hoistway Structure		
Concrete ☐	Brick & Concrete ☐	Other _____

☐ Unstandard ☑ Standard

NOTE

HW	HOISTWAY WIDTH	CW	CAR INSIDE WIDTH
HD	HOISTWAY DEPTH	CD	CAR INSIDE DEPTH
OP	DOOR OPENING WIDTH	CH	CAR HEIGHT
ROP	WALL OPENING WIDTH	MRW	MACHINE ROOM WIDTH
OPH	DOOR OPENING HEIGHT	MRD	MACHINE ROOM DEPTH
OH	OVERHEAD HEIGHT	MRH	MACHINE ROOM HEIGHT
CAR DBG	DISTANCE BETWEEN CAR GUIDE RAILS		
CWT DBG	DISTANCE BETWEEN COUNTERWEIGHT GUIDE RAILS		

Technical Requirement:

type	THJW5000/ 0.5 -VF		
F/P/D	/ /	Door type	Four Panels Centre Opening
load	5000 kg	speed	0.5 m/s
Machine	MCK500	Roping	4:1
T/sheave	ϕ 480	D/sheave	ϕ 400/520
car sheave	ϕ 400	CW sheave	ϕ 400
Shaft	HW 4100 mm x HD 4000 mm		
Cabin	CW 2400 mm x CD 3600 mm		
Door	OP 2200 mm x OPH 2300 mm		
Speed	0.5		(m/s)
Power	16.3		(kw)
OH	≥5000		(mm)
Pit	≥1600		(mm)
current			(A)

380V 3phase 5wire, 50Hz, fluctuation ±7%

Support Force (N)

R1	R2	R3	R4	P1	P2	P3	P4
252000	125000	152000	75000	184000	126000		

Technical Requirment

1. Power supply: machine room need equiped with power supply. Power supply box need be locked. Power supply should be 3P,5 wires,380v 50Hz. Voltage tolerence ±7%,imput power more than 50% of motor power,also equiped with air switch same capacity with power supply,also allow the supplement leakage protector. When use VVVF,need use special leakage switch. Ground resistor should be< 4Ω.It should use insulated conductor from floor to machine room. Keep sepearte for null wire and ground wire.
2. Shaft requirement,it should be only for lift, can not install non-related device(pipe,cable etc),and should keep the person entre into. The shaft plan size mean the min.size measured by plumb line,tolerence ~+50mm. Basically not allow the protruding beam and column. The proof pressure of shaft side should be ≥ 24MPa. Recommend to use full concrete,can not use the reserved steel. In case use solid brick,it should use reserved steel or make the ring beam on the surface of reserved steel,hight≥300mm. If use hollow brick,can choose C25 concrete fill into the wall. also make the ring beam on the surface of reserved steel,hight ≥300mm. If the shaft front wall is brick construction,it should make the concrete beam upsid of door hole to fix the landing door bracket,height ≥ 300mm. If have the requirement in the drawing,it should make the concrete in the entrence of hall door. It should equiped with lamp,brightness ≥50LX,install the lamp at 0.5m from the top and the bottom, in the middle,each lamp at <7m. The buffer block shouled be made accompany with special person. before that,need make the reserved ≥4 pcs joint bar,≥ϕ12mm,height ≥500mm from the pit floor. and should water proof. Keep the space for person entrance. Pit ladder is by user. Should installed it in a suitbale place if there have basement downside of the pit,should make the buffer block extend to the solid floor downside. If the floor distance beteen 2 fllor ≥1m,should set the safe door with the width 350mm.hight1800mm.
3. Machine room requiremnt(not for MRL),It had the passageway for the traction machine,
keep the entrance unblocked. the door opens outward, also can be locked.
Installed the fan,keep the humidity ≤85%,temperature +5℃~ 40℃,surrounding the reserved hole
should make the 50mm hole,keep the floor plan,also bear the load 700kg/m².
The motor beam should be supported in the concrete block,this concrete block should
extend to the building beam or bearing wall. Bearing side should make the reserved same side steel,
thickness 2mm,bearing side thickness should over the wall thickness 20mm,total thickness more than 75mm.
Standard wall 200mm,recommed the bearing wall thickness ≥200mm.
The hook in the machine room should indicate the max. load. It should install t
he ladder and barrier in case have stair.

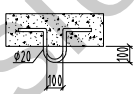

The hook

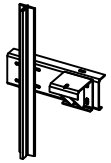

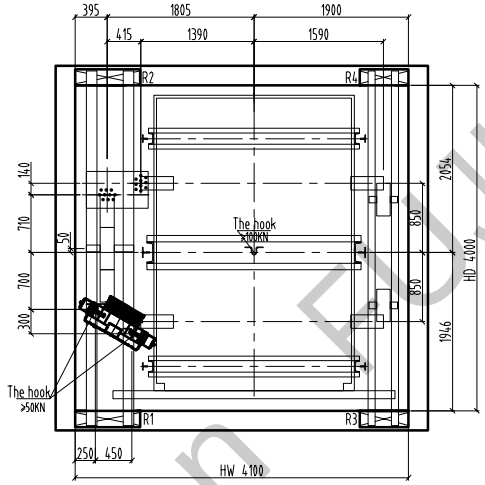

Overhead plan/1:60

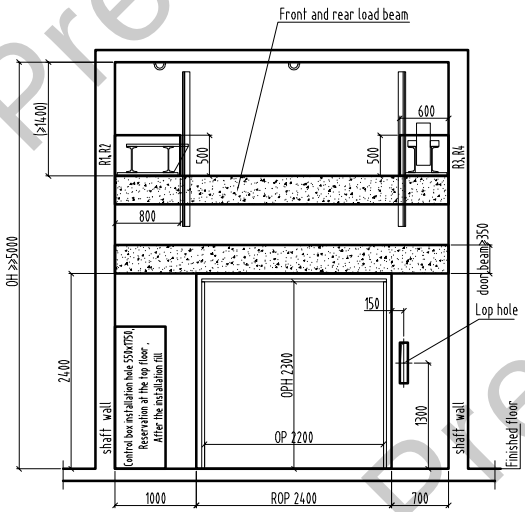

E/reserved hole/1: 60

Bottom box Lop: 100x500 (base station) 100x400 (remaining stations)
No bottom box Lop hole: ϕ50 hole

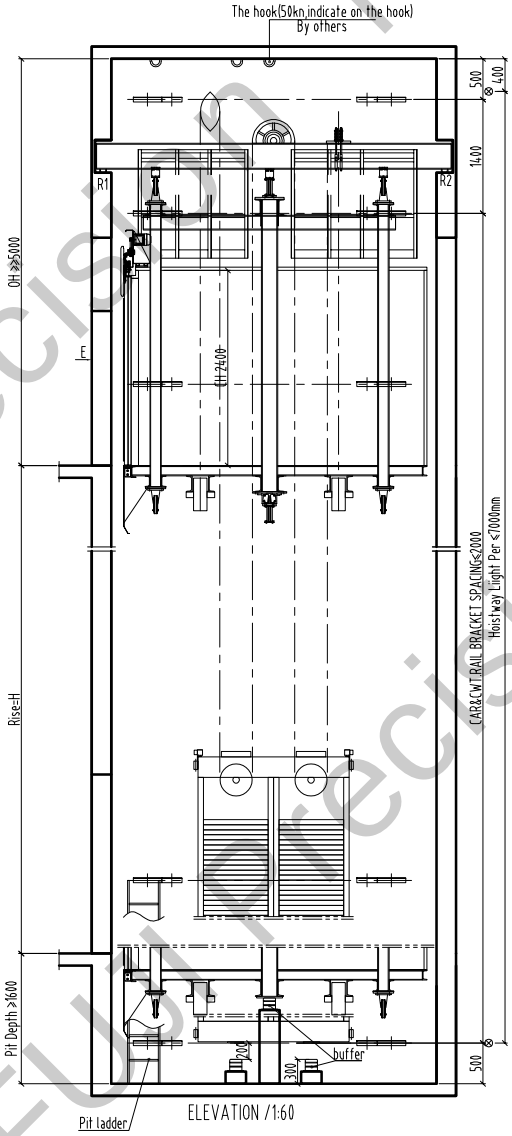

ELEVATION /1:60

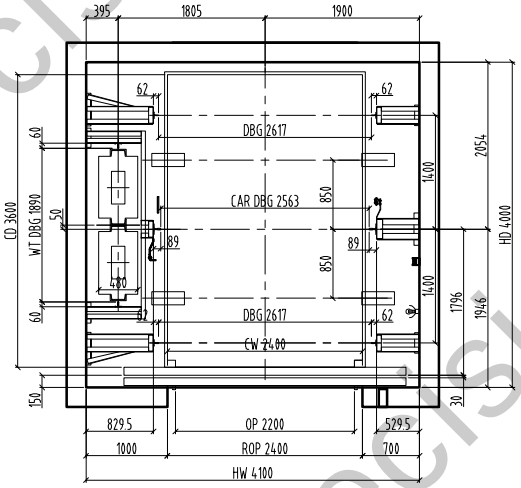

Hoistway plan/1:60

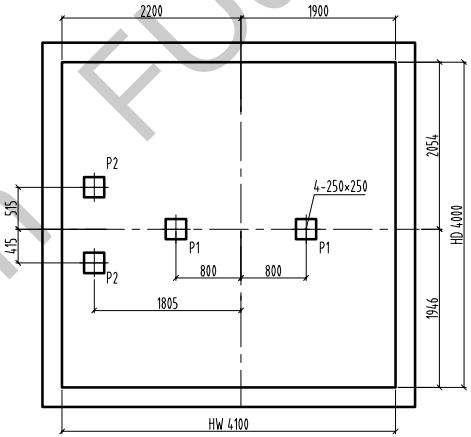

Pit plan/1: 60

OH	≥5000
Rise	H
10 F	
9 F	
8 F	
7 F	
6 F	
5 F	
4 F	
3 F	
2 F	
1 F	
G F	
B F	
Pit	≥1600
Floor	Height

Drawing		approver	
Drawing No.	FTHW 5000-03-		
manufacturing no.			
Project name			

FUJI PRECISION

FUJI Precision